USER MANUAL

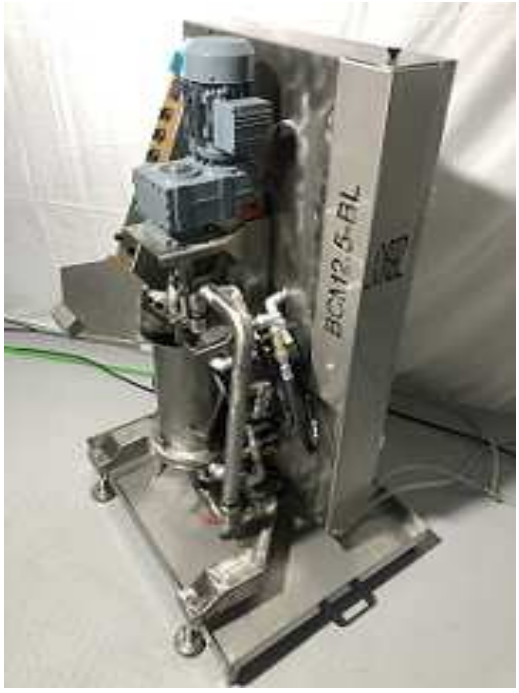

BCM2.5-BL CHOCOLATE BALL MILL

TABLE OF CONTENTS

1. OVERALL DIMENSIONS AND TECHNICAL INFORMATION
2. TRANSPORTATION
3. INSTALLATION
4. CONNECTING POWER SUPPLY
5. FILLING THE HEATING WATER
6. STARTING THE MACHINE
7. OPERATING THE MACHINE
8. CLEANING

OVERALL DIMENSIONS AND TECHNICAL INFORMATION

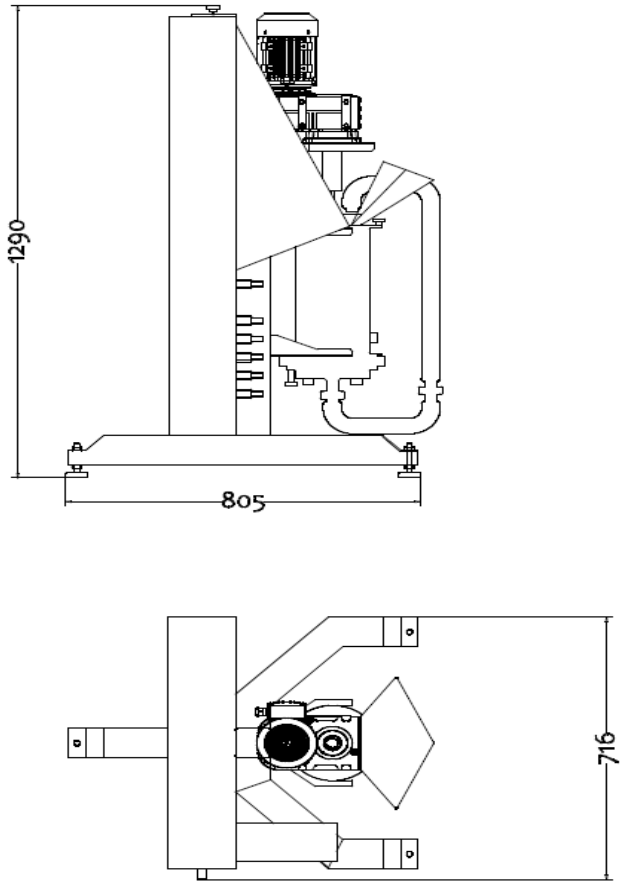

BCM2.5-BL

Description	Model / Type	Production Date	Serial Number
CHOCOLATE BALL MILL	BCM2.5-BL	2020	4
Supply Voltage	**Total Power**	**Width / Length / Height**	**Weight**
220 V. / 50 Hz	1442 Watt	700 / 800 / 1300 MM	100 KG

Organize San. Böl. 2. Cad. C Blok. No:13CE Karaman / TURKEY
www.oflaz.eu - mail@oflaz.eu

TRANSPORTATION

While carrying the machine, use the above shown lifting eye and lift the machine carefully. Or you can use a pallet truck through the feet of the machine shown below.

INSTALLATION

When you put the machine on the ground, adjust the vertical and horizontal balances by attaching a leveler to the mixing bowl as shown above.

Once the machine is balanced, connect the cold water supply in accordance with above picture and water directions.

CONNECTING POWER SUPPLY

Unreel the built in feeding cable shown in the above picture to connect the machine to power supply, then plug the below seen plug to the power outlet in your site. If the plug is different than your standarts, ask for help from an electrician.

FILLING THE HEATING WATER

Open the heater cover as shown above. Then fill the below seen hot water tank with water until reaching a level 5 cm higher than thermocouple.

STARTING THE MACHINE

To start the machine, turn the above seen switch position from 0 to 1. Then check below shown display screen if it's written “RDY” as seen below.

OPERATING THE MACHINE

Before operating the machine bring the heat control switch to on position as shown above. This will turn the heat controller on as seen in below picture.

By using the arrow keys adjust the temperature level you want. Then wait the machine until the water temperature reaches to set value.

Once the machine reaches to requested temperature, you can start putting your raw materials.

To add the raw materials, open the cover and use funnel shown below.

ATTENTION! : The ball mill runs only when enough amount of fat is added. Lower than 25% total fat content is not reccommended and may create vital problems. Before any dry ingredients are added, fat must be poured into the ball mill mixing tube and melted until it takes a liqued form.

After adding the fat, you can start agitator by means of its switch shown below. This switch gives the possibility to run the agitator both in forward and reverse directions. If you think that bottom sieve is blocked by dry ingredients, running the agitator in revers direction may help and clean the holes in the sieve.

Use the potantiometer to adjust the speed as seen below. The current rotational speed will be shown on the display as Hertz;

When the ballmill agitotor is in stop, the display screen on the frequency covertor of the motor is like below in rdy (ready) mode.

When the agitator is being started, the screen starts showing either the total power consumption ratio in terms of percentage and the small led light indicated by the tip of the pen moves under the % sign

or it shows the speed of the agitator in terms of hertz and the small led light moves under the Hz. abbrivation as indicated by the tip of the pen below.

By pressing on the escape key indicated in the pictures below, you can switch between the hertz and % modes.

The value under % sign shows the total power absorbed by the agitator motor while the agitator runs. Experimentally, this value is around 10 % when the machine is empty or filled only by fat. As the dry ingredients are added, this value increases. Depending on the viscosity achived, this value can go up to 100 %. It's always better keeping this value under 90%. If this value exceeds 100 % for more than 10 seconds, it's recommended to add more fat to decrease the viscosity.

ATTENTION! : Running the machine at 100 % or over 100 % motor power for long time can cause vital breakages and may result with the burnt of agitator motor.

ATTENTION! : Further adjustments on this display screen is not recommended for the operator. If the customer wants to change driver parameters it's strongly recommended to get help from an electrician.

NOTE : Please refer to Control Technicques Commander C200 driver instruction manual for further adjustments.

When you finish adding raw materials, you can turn the ventilator on as seen below. This ventilator pushes fresh and filtered air into the mixing vessel to facilitate removal of bad odour which may be generated by some ingredients.

Below is the picture of odour removing ventilator.

Generally within around one hour, the mixture will reach to an acceptable fine size depending on the ingredients. You can check the fine size of the mixture by taking sample by means of below seen valve at the bottom of the chocolate return pipe without interupting the process;

When you achive the fine size you want, you can stop the agitator and turn the goose neck pipe to discharge position as seen below;

CLEANING

The ball mill needs to be cleaned properly with fat after tests. If you want to wash all the food contact parts, you must dry them perfectly and apply oil on them to protect against oxidation. All the parts are designed to facilitate disasambling and asambling them as seen in below picture;

ATTENTION! : It's strongly recommended to put and leave 1 liter of fat inside the ball bill for long period of stops.